MANTIS® 35.10

CE DIN 15018

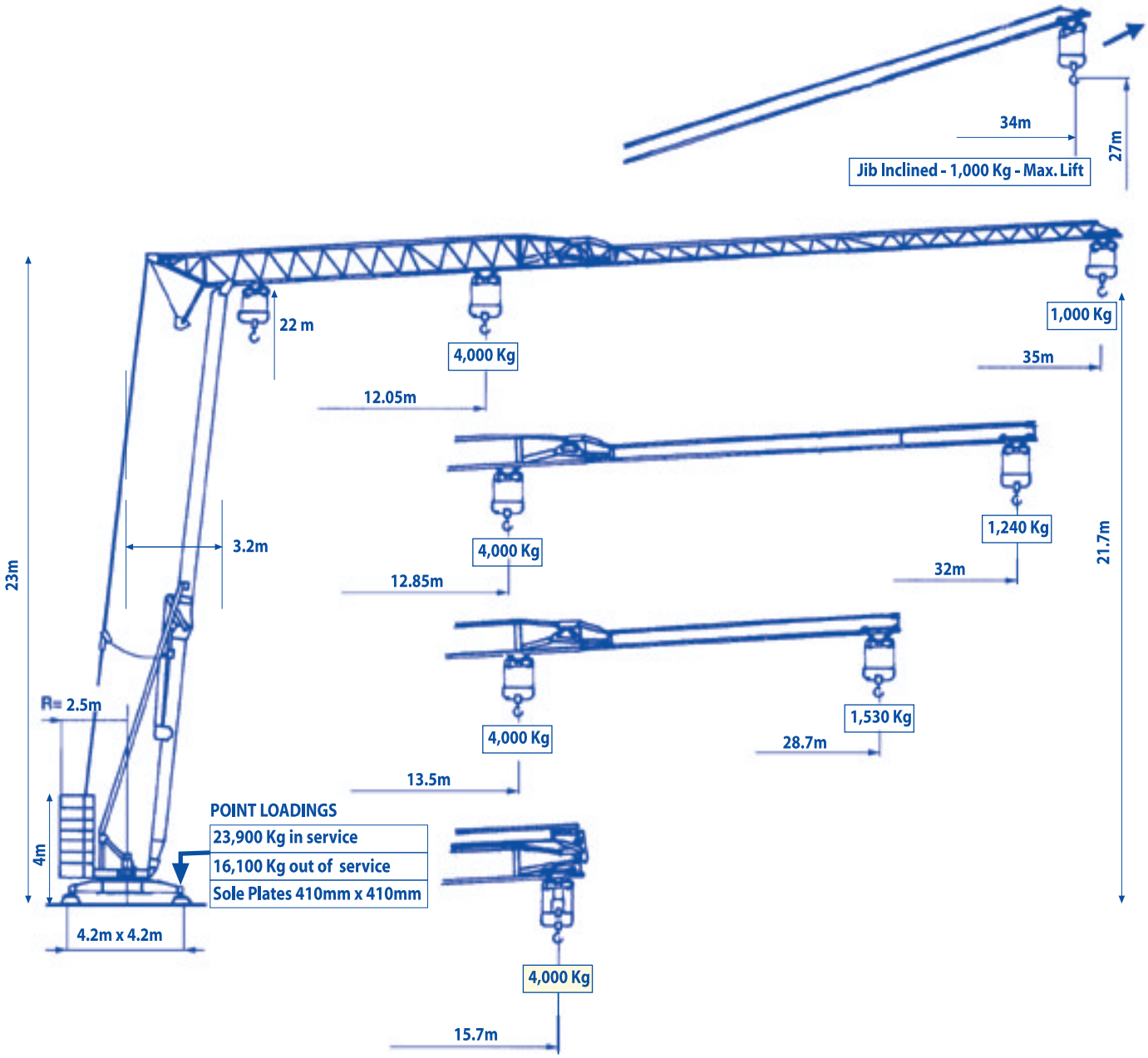

MANTIS® CRANES

Load Curves

35m

12.05	14	16	18	20.4	22	24	26	28	30	32	34	35	m
4000	3240	2700	2300	2000	1815	1620	1465	1330	1220	1120	1035	1000	Kg

Full 35m Jib folded out

32m

12.85	14	16	18	20	21.95	24	26	28	30	32	m
4000	3550	2960	2530	2200	2000	1785	1610	1465	1345	1240	Kg

3m jib section removed reducing maximum jib length to 32m

28.7m

13.5	14	16	18	20	22	23.21	24	26	28.7	m
4000	3815	3185	2720	2370	2090	2000	1910	1750	1530	Kg

6m jib section removed reducing jib length to 28.7m

15.7m

4000Kg - Max.

19.3m jib section hydraulically folded back to reduce jib length to 15.7m

4 fall rope operation

4 fall or 2 fall rope operation

Speed of Mechanisms

HOISTING		m/min.	6	24	48	3	12	24
		kg	2000	2000	1300	4000	4000	2600
		CV-PS hp	3	12	14	3	12	24
		kW	2,2	8,8	10,3	2,2	8,8	10,3

		m/min.	CV-PS hp	kW
TROLLEYING		20/40	1,5/3	1,1/2,2
SLEWING		0,2-1,1 tr/min - u/min rpm - g/min	3,5 kgm	4,5

Power Requirements			
MAINS ELECTRICITY	400V (+6%-10%) @ 50Hz	GENERATOR	Frequency Controlled 30KVA However we recommend using 40KVA Contactor Controlled 60KVA
KVA	23KVA		

Weights

Dead Weight without Transport Axles & Permanent Ballast	14,200 Kg
Dead Weight with Transport Axles & 4,000kg Permanent Ballast	19,000 Kg

BALLAST WEIGHTS	
12 No. @ 1,770 Kg	21,240kg
1 No. @ 4,000 Kg - Permanent	4,000kg
Total	25,240 Kg

Mode of Transport

Site Axles

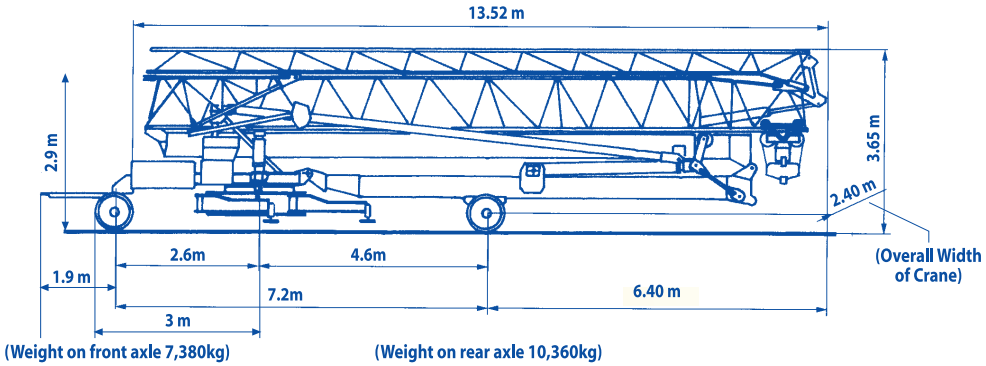

Suitable Low Loader Trailer

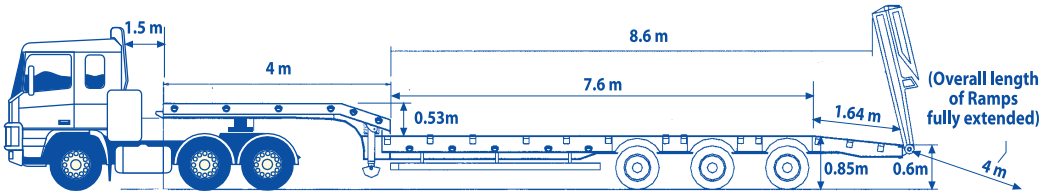

Erection Schematic

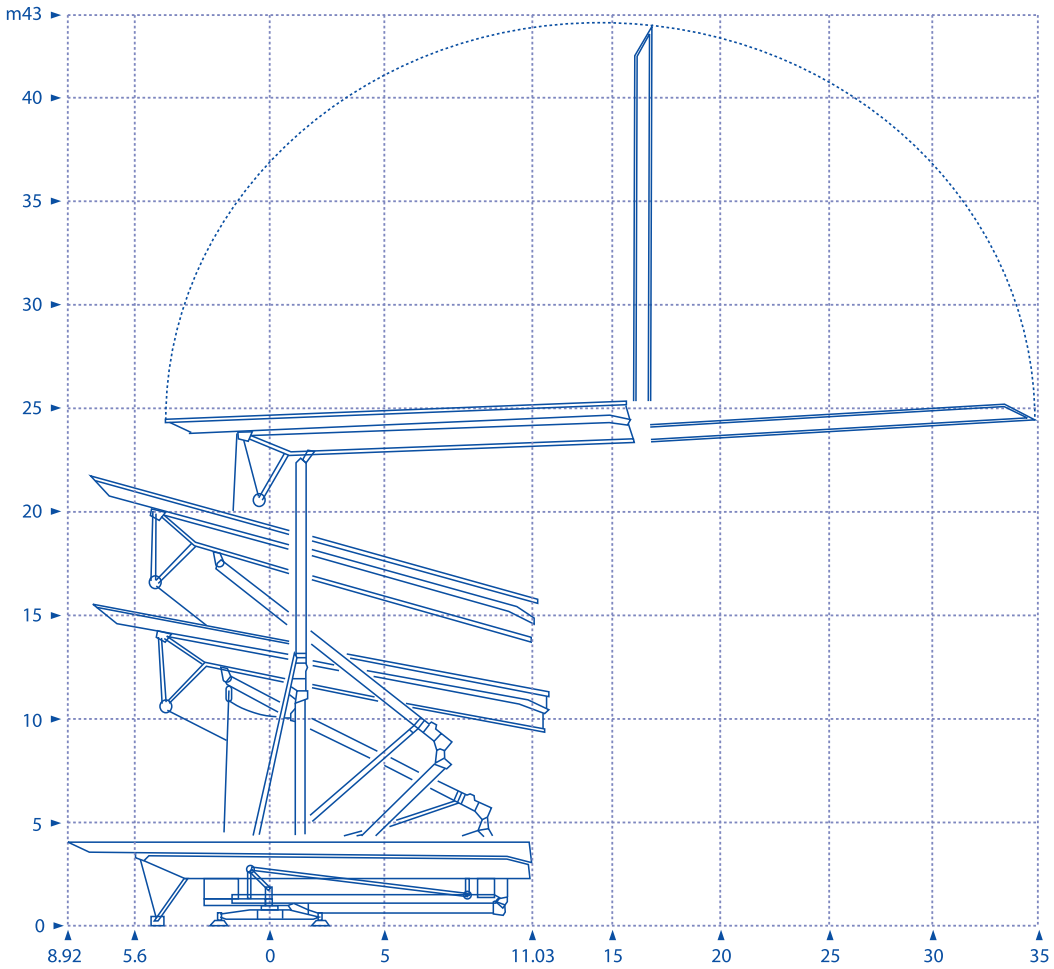

Model shown in picture may not be this actual model

MANTIS® CRANES

Crane Hire, Sales & Support Services

HEAD OFFICES LOCATED AT:

IRELAND

Mantis Cranes Ireland
Lismulladuff, Killygordon, Lifford,
Co. Donegal, Ireland, F93 AW73
Tel: +353 (0)74 9149981
info@mantiscranes.ie

UK

Mantis Cranes UK
Upper Higham Lane,
Rushden, Northants, NN10 0SU
Tel: +44 (0) 1933 460883
info@mantiscranes.co.uk

www.mantiscranesgroup.com

This commercial document is not legally binding. Changes may be made to the content without any notification.